FLUID®
FIT AND FORGET

Door Closer

DOOR CONTROL SERIES

excellent mightiness durable spring

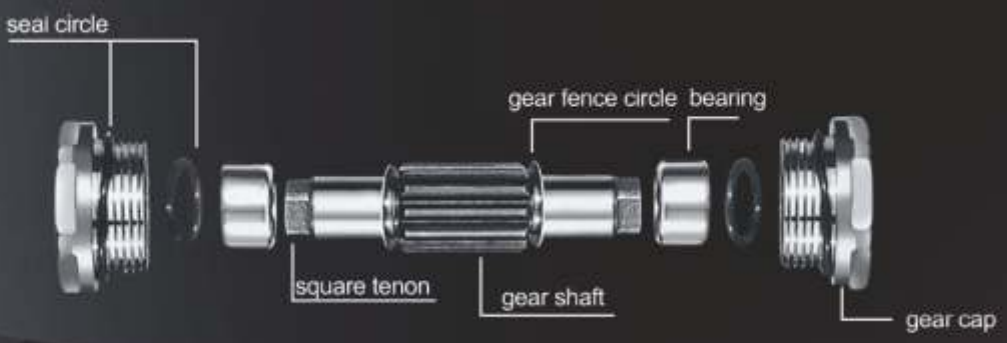

Door Closer

010F

010F Series Door Closer

010F95101 Standard Arm Door Closer

- Closing Force EN 1 - 3
- Speed Adjustment 180° - 15° with Standard Arm
- Maximum Door Width 950mm
- Maximum Door Weight 65 kg
- Maximum Angle of opening 120°
- Finish : Silver

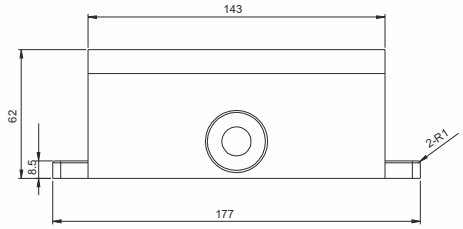

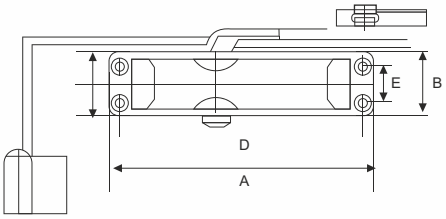

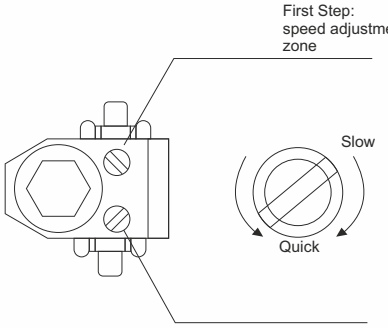

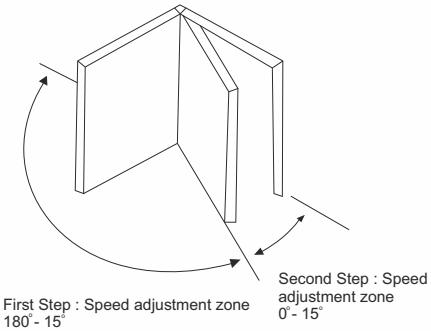

010F95102 Standard Arm Door Closer

- Closing Force EN 1 - 3
- Speed Adjustment 180° - 15° with Standard Arm
- Maximum Door Width 1000mm
- Maximum Door Weight 65 kg
- Maximum Angle of opening 120°
- Finish : Silver

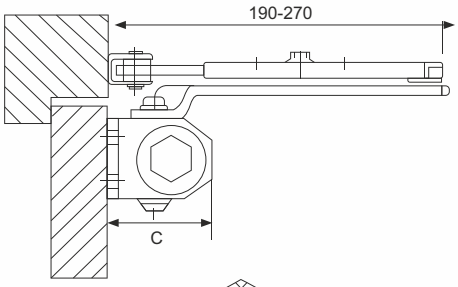

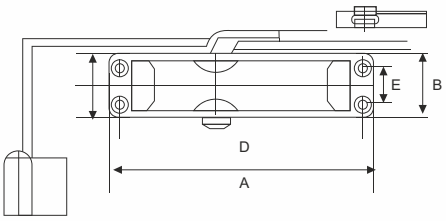

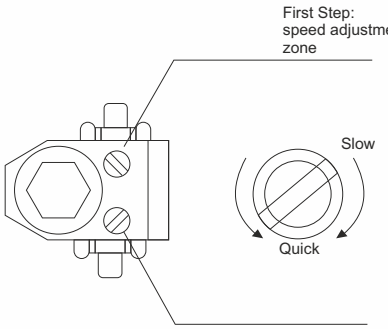

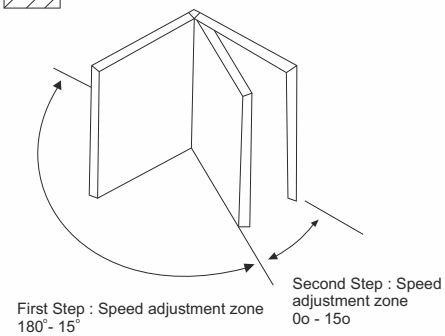

010F95103 Standard Arm Door Closer

- Closing Force EN 2 - 4
- Speed Adjustment 180° - 15° with Standard Arm
- Maximum Door Width 1050mm
- Maximum Door Weight 80 kg
- Maximum Angle of opening 120°
- Finish : Silver

Installation

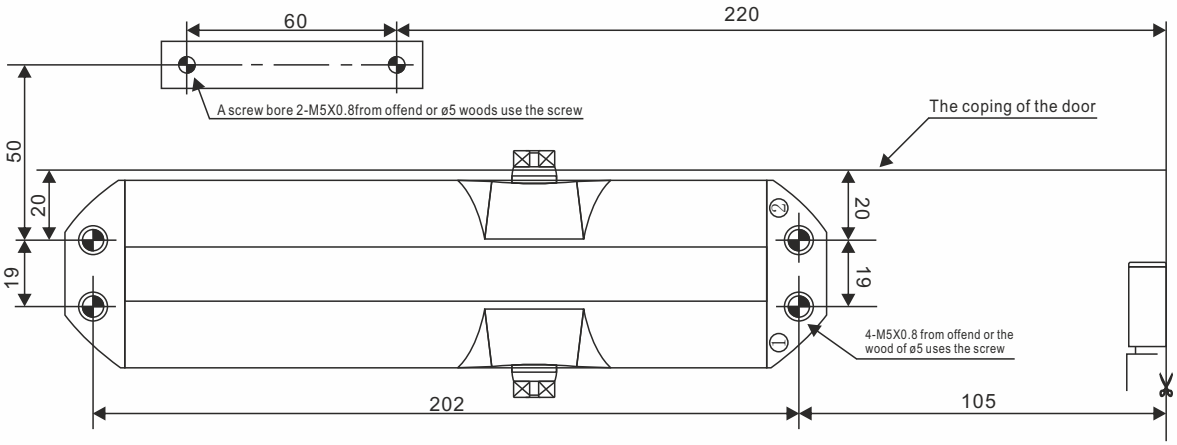

It is left to open a paper rules

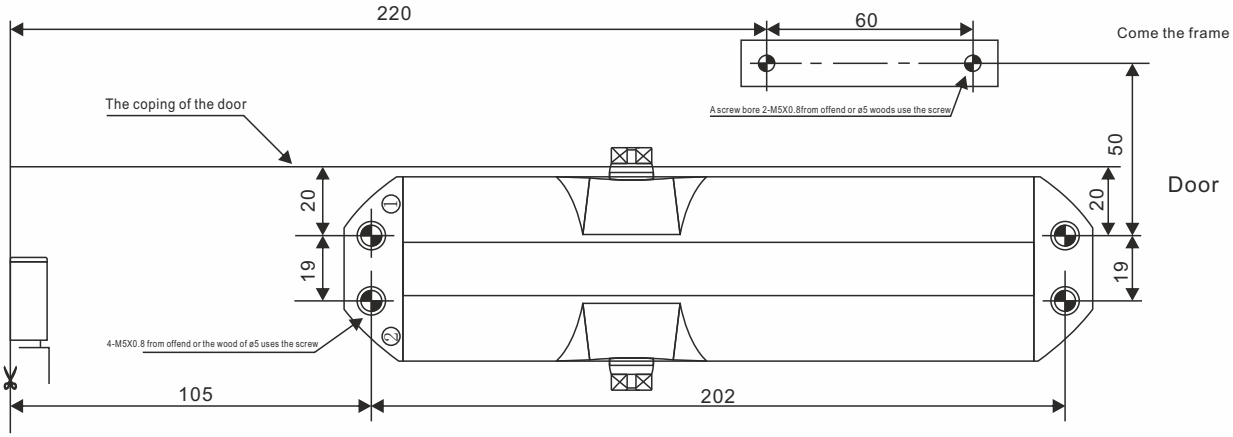

It is left to open a paper rules

Installation

The top diagram a row arithmetic figure installs the size for the standard,shearing along the line the bottom can immediately make the gearing paper rules.

Take the gearing size

Press according to the way of the designation the paper rules in door and a frames on,and fix with the tape good,and mark out 4 bores on the door, mark out on a frame moreover two bores that link,and the usage arills a hole the machine Φ5.0 of bore,metals door such as the usage Hour,must of offend again the tooth

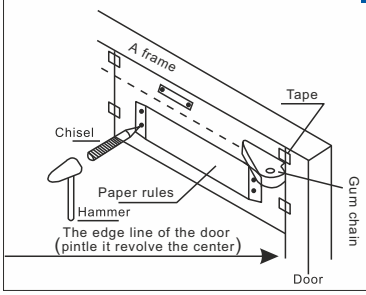

Install the machine

Drill a hole according to the fanlight the position install the machine and fix with 4screws.

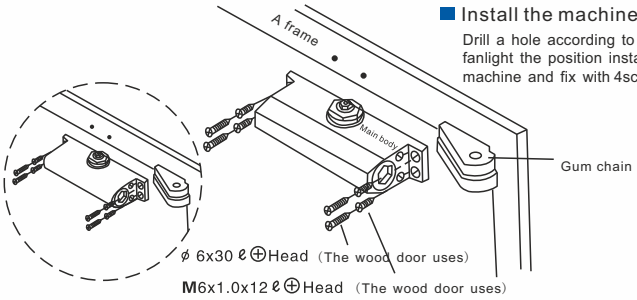

Fix conjunction

Ascend according to a frame of drill a hole the position install to connect and fix with 2 screws.

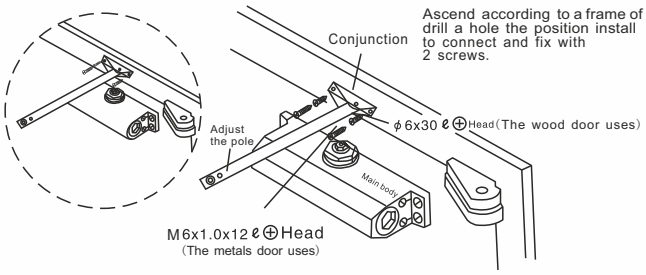

Combine to drive the plank

Will drive the plank inside it everywhere type into the slot of Everywhere type, and fix with the screw.

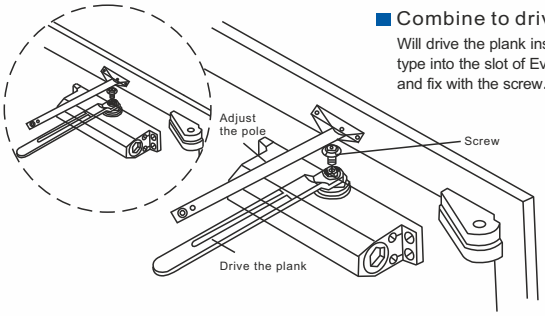

Combine to drive the plank with adjust the pole

Will adjust the pole adjust and a frame 90° Combining will drive the plank and adjust the pole with the screw Fix.

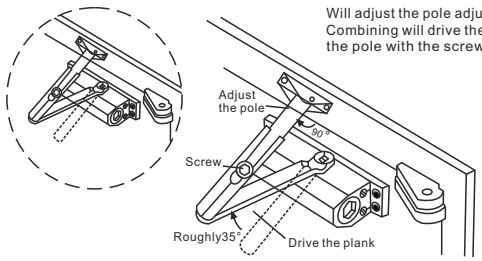

Complete the combination

Install to complete, and a cover.

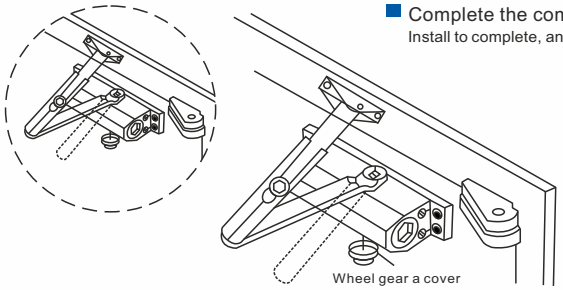

010F95109 Standard Arm Door Closer

- Closing Force EN 2 - 5
- Speed Adjustment 180° - 15° with Standard Arm
- Maximum Door Width 1400mm
- Maximum Door Weight 120 kg
- Maximum Angle of opening 120°
- Back check, delay action
- Finish : Silver

Installation

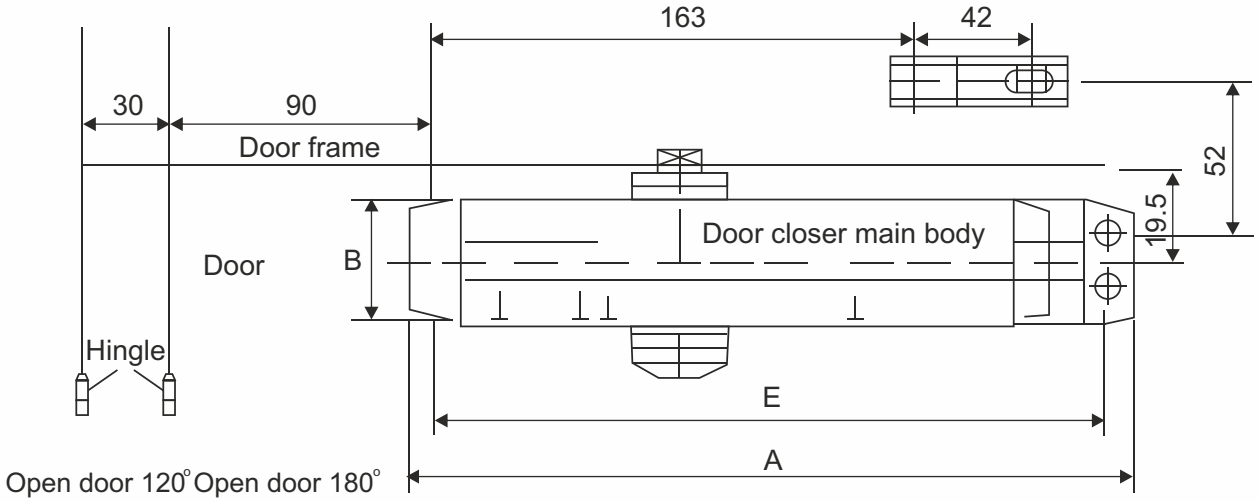

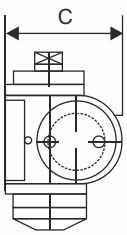

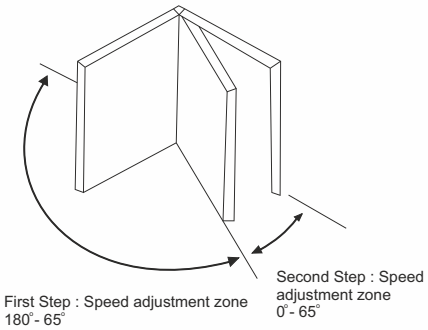

010F Series Door Closer

010F95113	Slide Rail Door Closer

- Closing Force EN 1 - 3
- Speed Adjustment 180° - 15° with Hold Open Slide Rail
- Maximum Door Width 950mm
- Maximum Door Weight 65 kg
- Maximum Angle of opening 120°
- Finish : Silver

TECHNICAL DETAIL

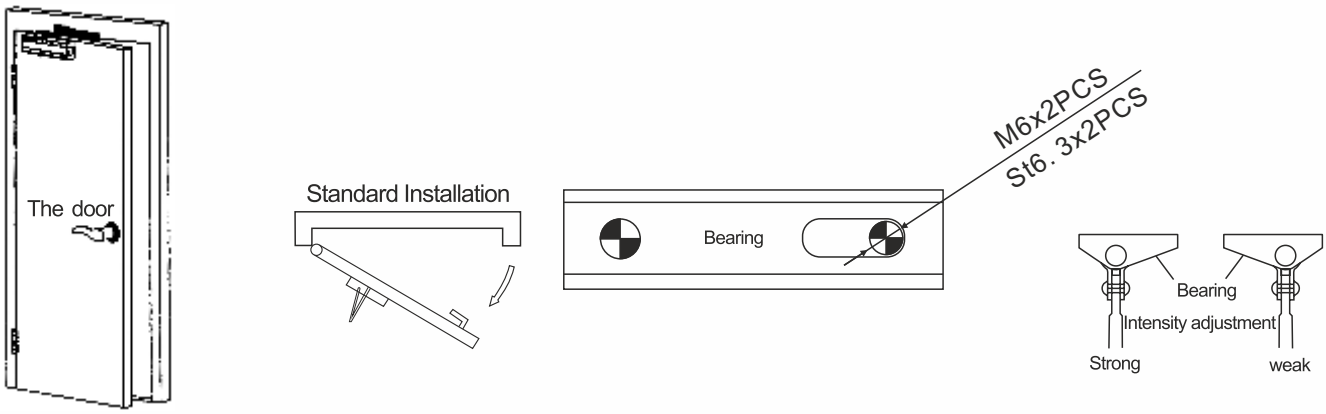

First, the door mounted vertically steps:

1. According to need to install the appropriate mounting template cut, pasted on the door and door frame.
2. According to the mounting template with the drill location bottom hole drilled screws (wood: ø3.5; Metal doors: ø4.2, ø5.1 and attack M5 thread)
3. Remove the primary arm and the adjustable arm. The main arm perpendicular to the body behind closed doors, mortise and tenon mounted on the shaft, and with a combination of screw fastening.
4. According to drilled mounting holes, the door closer body and adjustable arm bearings are mounted on the door or door frame, and tighten.
5. A main arm adjustable arm angle perpendicular to the door assembly together with flat washers and tighten the screws (scrwe length can be adjusted to complete the assembly) and then tighten the screw on the nut.
6. Install the decoration panel, the dust cover on the shaft of another cover.

Installation

Standard Installation:

The left-hand side vertical sliding door installation template;
(Right-hand side vertical sliding door sliding door left side of the mounting template and the template in the opposite direction)

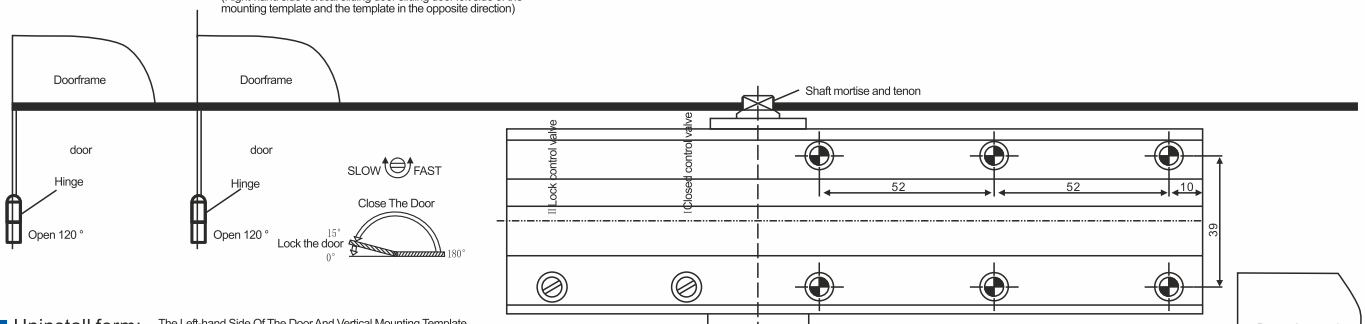

Uninstall form:

The Left-hand Side Of The Door And Vertical Mounting Template.
(Right-hand Side Of The Door With His Left Hand To Push The Vertical Mounting Template Template Side Door In The Opposite Direction)

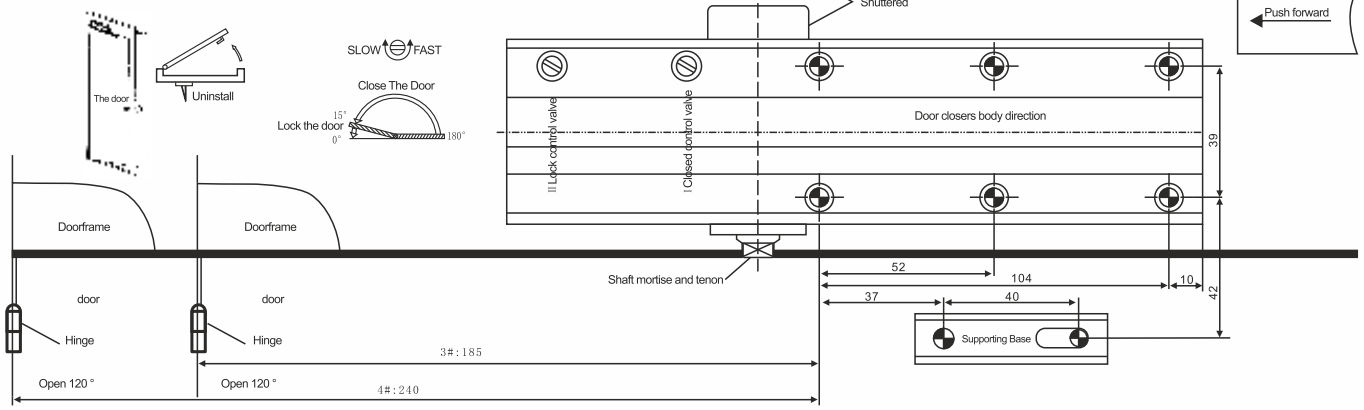

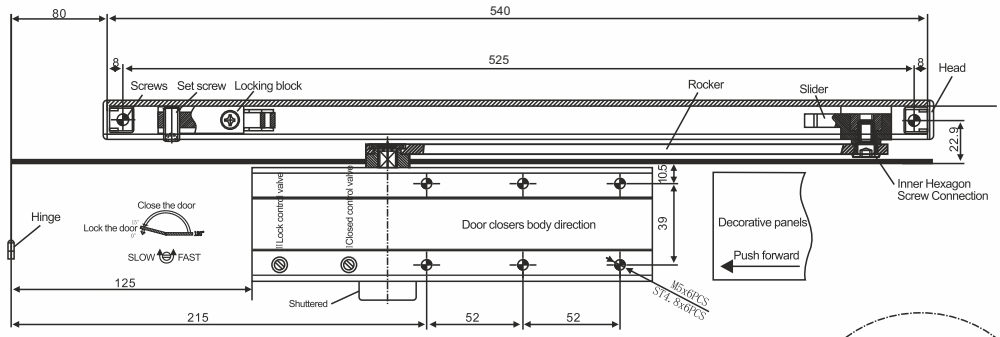

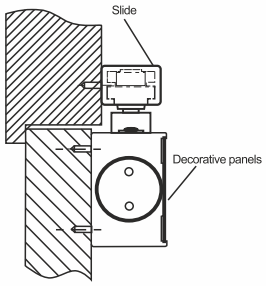

The rail installation steps:

1. According to the size of the installation diagram on the door closer body and slide with a self-tapping screw fastening (if metal door installed after the first drilling tapping screw fastening)
2. The rocker arm shaft is mounted on the square hole mortise and tenon, and use the rocker arm body intersects with closer 15 degree, and then use a combination of screw fastening.
3. The door opened at an angle, the arm is rotated in the closing direction, and then connected with a hex screw and slide the arm connected.
4. According to the choice of the angle of the door stop, the locking block is locked in the corresponding position on the rail.
5. Fitted with decorative panels: the dust cover on another shaft.

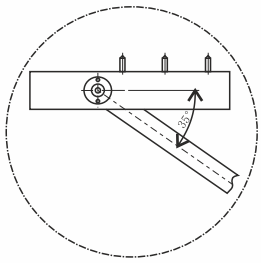

Door closers speed adjustment:

1. 1st speed control valve is closed. 2nd is to lock the door speed control valve.
2. The control valve counter-clockwise to increase faster, control valve clockwise to slow down.

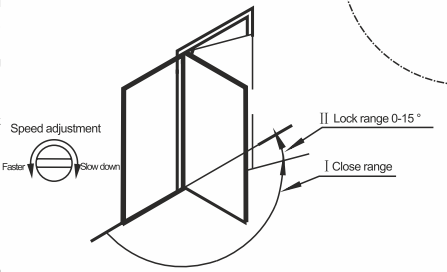

Stop door angle adjustments:

1. Set screws loose lock on the block, move the lock block to the desired position, the locking set screw can be screwed on the block.

Note:

1. The front door is not installed, non-flip shaft mortise and tenon.
2. The installation arm can not be beat over power shaft mortise and tenon.
3. Behind closed doors with automatic closing function, non-forcible door closing force.
4. Half a month after use, all departments should tighten the screw again.
5. Pay attention to the annual summer and winter speed regulation.
6. When the governor is prohibited to spin out of control valve body outer door closers.

010F Series Door Closer

010F95114	Slide Rail Door Closer

- Closing Force EN 2 - 4
- Speed Adjustment 180° - 15°
  with Hold Open Slide Rail
- Maximum Door Width : 1050mm
- Maximum Door Weight : 80 kg
- Maximum Angle of opening : 120°
- Finish : Silver

TECHNICAL DETAIL

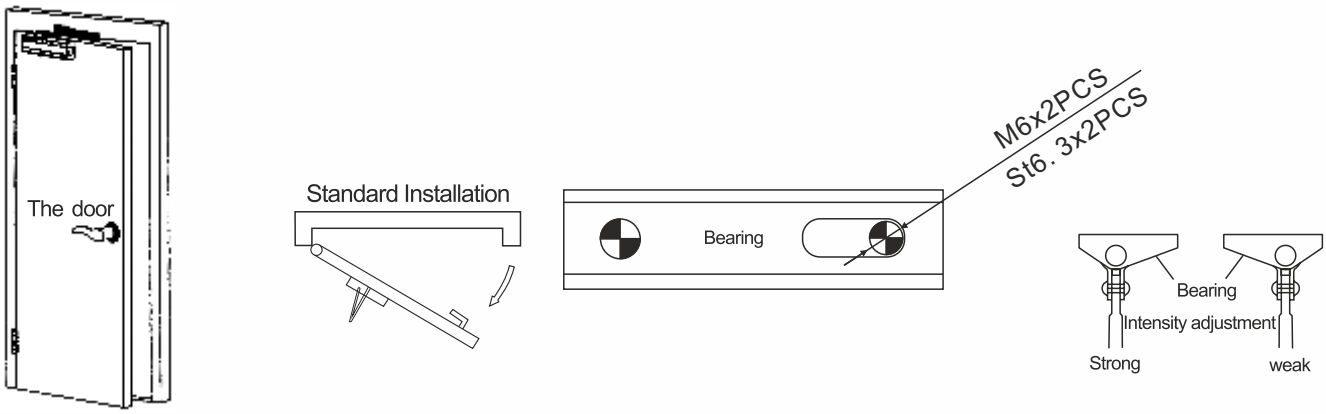

First, the door mounted vertically steps:

1. According to need to install the appropriate mounting template cut, pasted on the door and door frame.
2. According to the mounting template with the drill location bottom hole drilled screws (wood: ø3.5; Metal doors: ø4.2, ø5.1 and attack M5 thread)
3. Remove the primary arm and the adjustable arm. The main arm perpendicular to the body behind closed doors, mortise and tenon mounted on the shaft, and with a combination of screw fastening.
4. According to drilled mounting holes, the door closer body and adjustable arm bearings are mounted on the door or door frame, and tighten.
5. A main arm adjustable arm angle perpendicular to the door assembly together with flat washers and tighten the screws (scrwe length can be adjusted to complete the assembly) and then tighten the screw on the nut.
6. Install the decoration panel, the dust cover on the shaft of another cover.

Installation

Standard Installation:

The left-hand side vertical sliding door installation template;
(Right-hand side vertical sliding door sliding door left side of the mounting template and the template in the opposite direction)

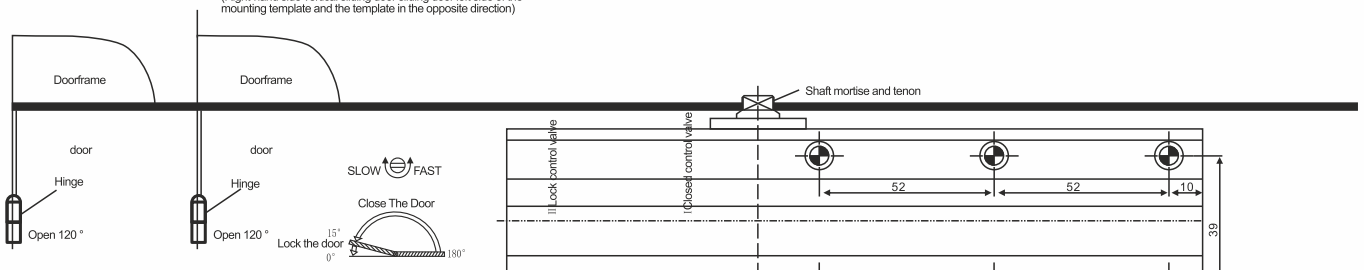

Uninstall form:

The Left-hand Side Of The Door And Vertical Mounting Template.
(Right-hand Side Of The Door With His Left Hand To Push The Vertical Mounting Template Template Side Door In The Opposite Direction)

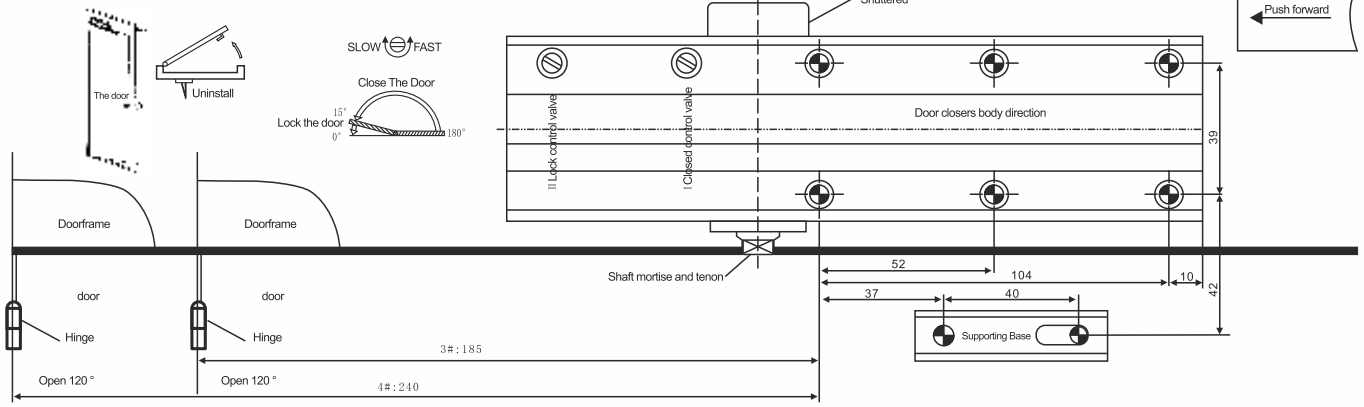

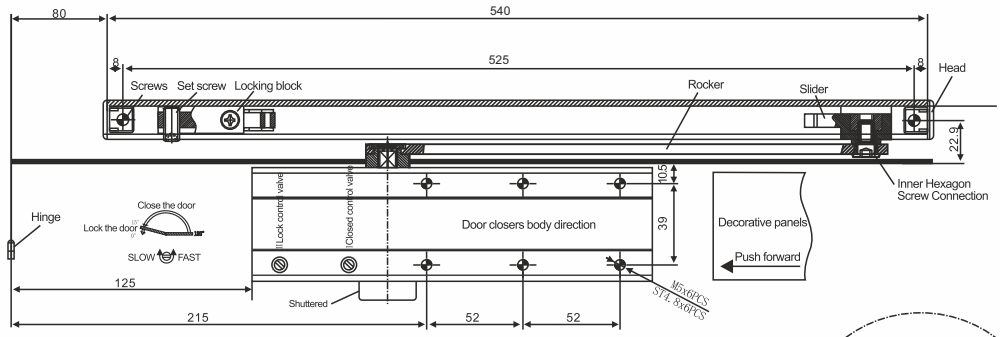

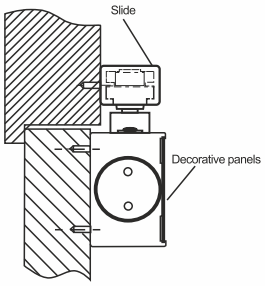

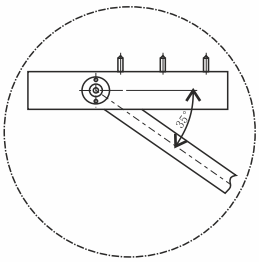

The rail installation steps:

1. According to the size of the installation diagram on the door closer body and slide with a self-tapping screw fastening (if metal door installed after the first drilling tapping screw fastening)
2. The rocker arm shaft is mounted on the square hole mortise and tenon, and use the rocker arm body intersects with closer 15 degree, and then use a combination of screw fastening.
3. The door opened at an angle, the arm is rotated in the closing direction, and then connected with a hex screw and slide the arm connected.
4. According to the choice of the angle of the door stop, the locking block is locked in the corresponding position on the rail.
5. Fitted with decorative panels: the dust cover on another shaft.

Door closers speed adjustment:

1. 1st speed control valve is closed. 2nd is to lock the door speed control valve.
2. The control valve counter-clockwise to increase faster, control valve clockwise to slow down.

Stop door angle adjustments:

1. Set screws loose lock on the block, move the lock block to the desired position, the locking set screw can be screwed on the block.

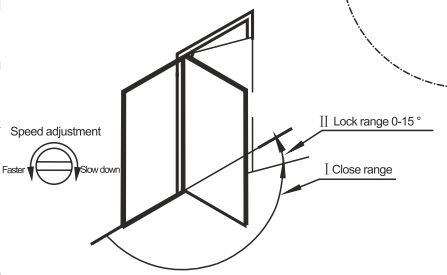

Note:

1. The front door is not installed, non-flip shaft mortise and tenon.
2. The installation arm can not be beat over power shaft mortise and tenon.
3. Behind closed doors with automatic closing function, non-forcible door closing force.
4. Half a month after use, all departments should tighten the screw again.
5. Pay attention to the annual summer and winter speed regulation.
6. When the governor is prohibited to spin out of control valve body outer door closers.

010F Series Door Closer

010F95107 Slide Rail Concealed Door Closer

- Closing Force EN 1 - 3
- Speed Adjustment 180° - 15° with Hold Open Slide Rail
- Maximum Door Width 950mm
- Maximum Door Weight 65 kg
- Finish : Silver

Installation

■ Part name & assembly diagram

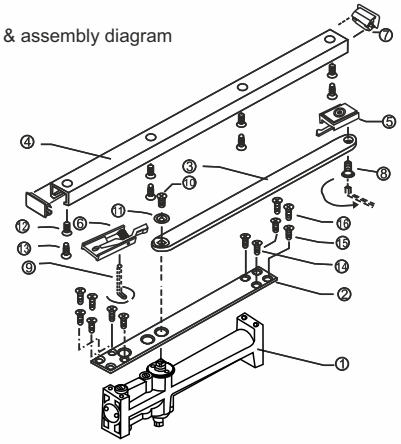

NO	Part Name	Quantity
1	Body Cast	1
2	Fixed Plate	1
3	Main Arm	1
4	Slide Rail	1
5	Sliding Block	1
6	Stop Block	1
7	End Cap	2
8	M8 Set Bolt	1
9	5mm Hexagon Wrench	1
10	M5x15LLow Head CAP Screw	1
11	Washer	1
12	M5x15L Low Head CAP Screw	4
13	3/16"x1"L low Head Iron Tapping Screw	4
14	M5x12L Low Head CAP Screw	4
15	M5x15L Low Head CAP Screw	4
16	3/16"x1"L low Head Iron Tapping Screw	4

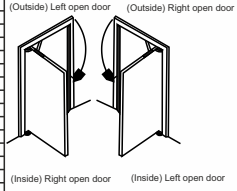

■ Method of speed adjustment

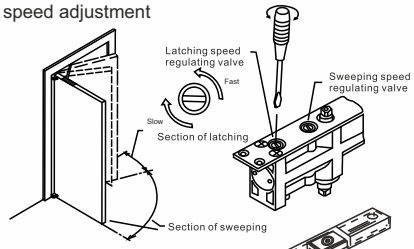

■ Method of the opening angle adjustment

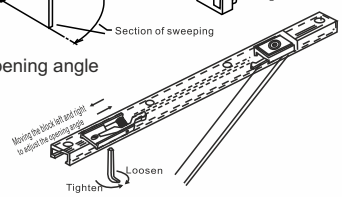

1. Moving the tightening block left and right can adjust the opening angle.
2. The stop biock is used to determine the opening angle.Once the stop block is fixed,the door should not be opened to an angle which is larger than the angle between the stop biock and the frame or the door will be damaged.

The door closer is suitable for the left and right open door.

■ Method of installation

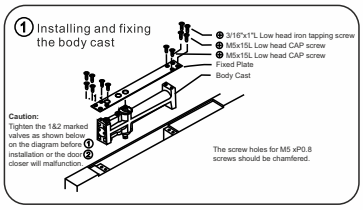

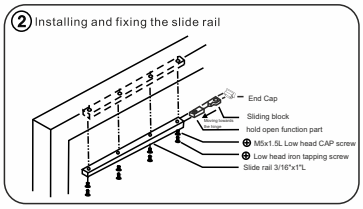

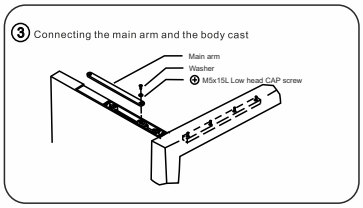

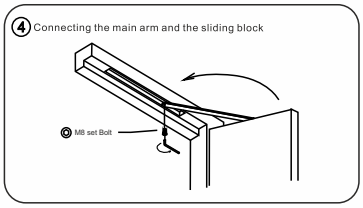

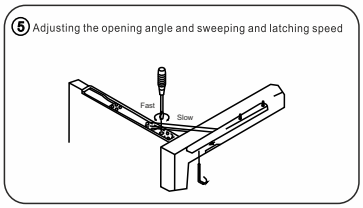

Concealed Round Door Closer Installation Diagram

● Diagram for left open door

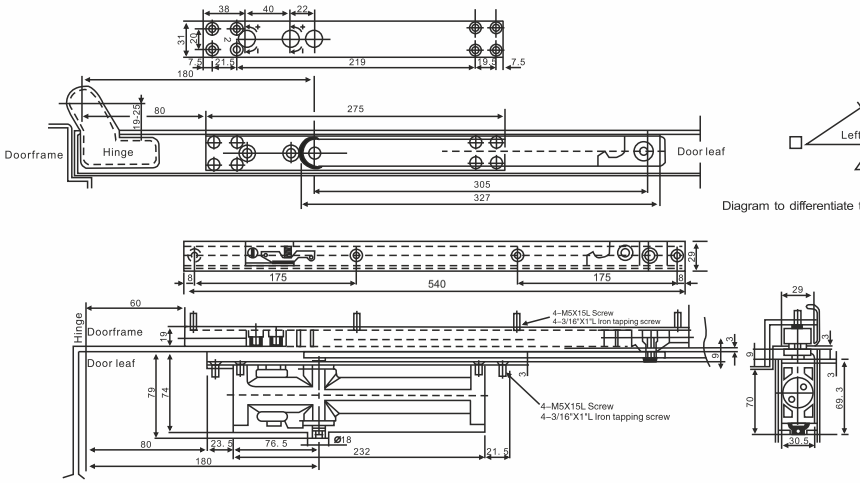

● Diagram for right open door

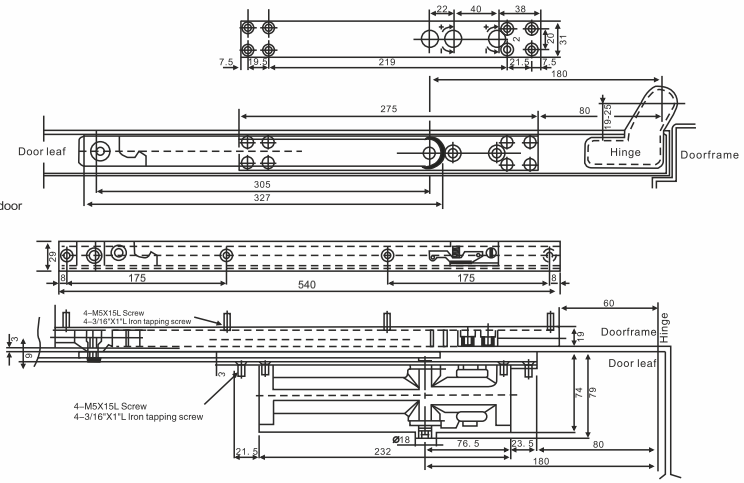

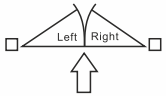

Diagram to differentiate the left and right open door

● Diagram for left open door (top jamb installation)

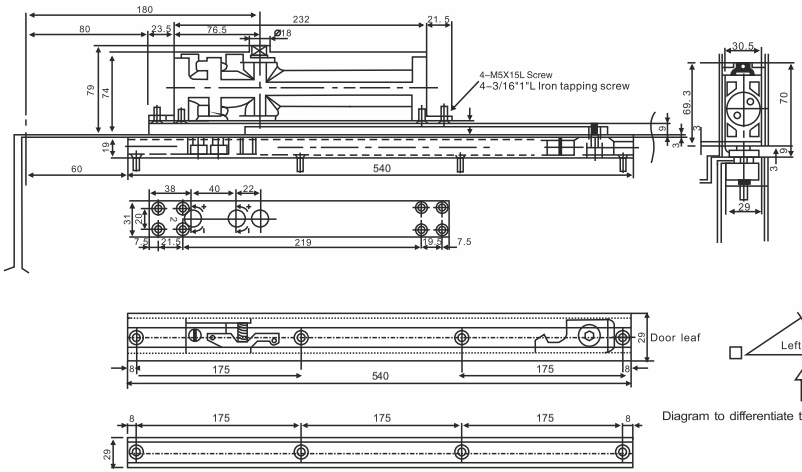

● Diagram for right open door (top jamb installation)

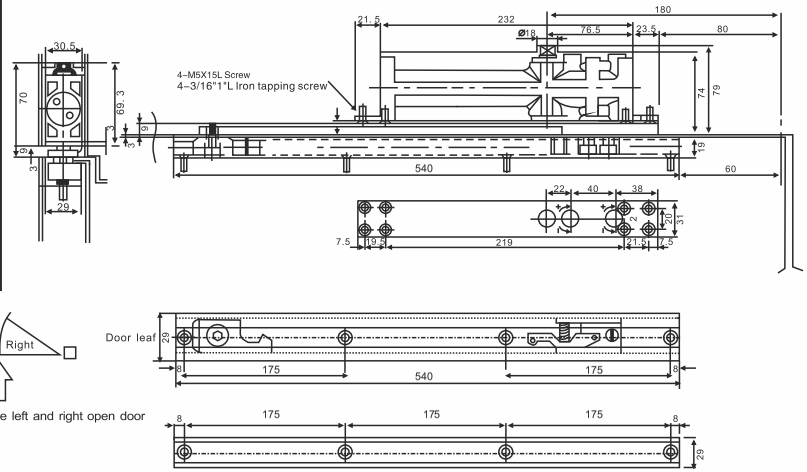

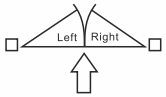

Diagram to differentiate the left and right open door

010F Series Door Closer

010F95108 Slide Rail Concealed Door Closer

- Closing Force EN 3 - 5
- Speed Adjustment 180° - 15° with Hold Open Slide Rail
- Back-Check Self-Regulating
- Maximum Door Width : 1300mm
- Maximum Door Weight : 80 kg
- Maximum Angle of opening : 120°
- Back Check Delay Action
- Finish : Silver

Installation

Part name & assembly diagram

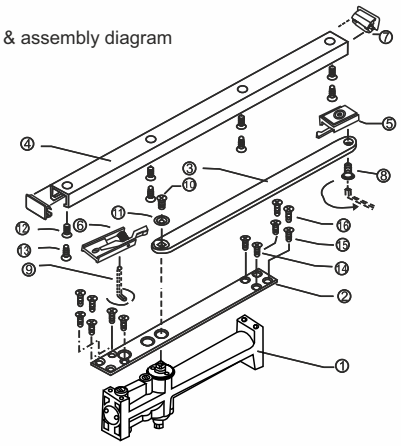

NO	Part Name	Quantity
1	Body Cast	1
2	Fixed Plate	1
3	Main Arm	1
4	Slide Rail	1
5	Sliding Block	1
6	Stop Block	1
7	End Cap	2
8	M8 Set Bolt	1
9	5mm Hexagon Wrench	1
10	M5x15LLow Head CAP Screw	1
11	Washer	1
12	M5x15L Low Head CAP Screw	4
13	3/16"x1"L low Head Iron Tapping Screw	4
14	M5x12L Low Head CAP Screw	4
15	M5x15L Low Head CAP Screw	4
16	3/16"x1"L low Head Iron Tapping Screw	4

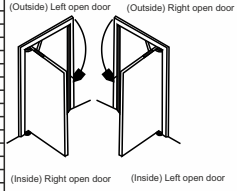

Method of speed adjustment

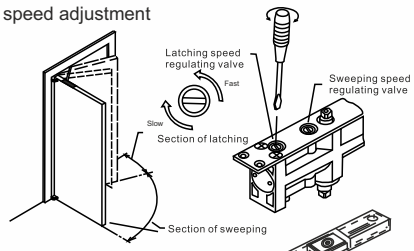

Method of the opening angle adjustment

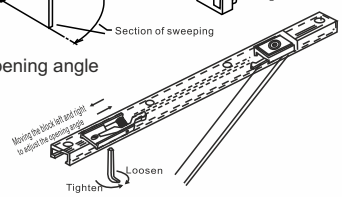

1. Moving the tightening block left and right can adjust the opening angle.
2. The stop biock is used to determine the opening angle.Once the stop block is fixed,the door should not be opened to an angle which is larger than the angle between the stop biock and the frame or the door will be damaged.

The door closer is suitable for the left and right open door.

Method of installation

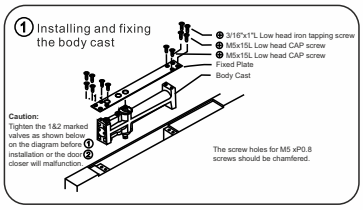

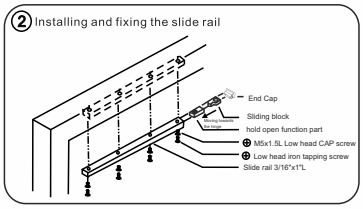

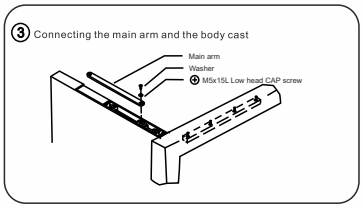

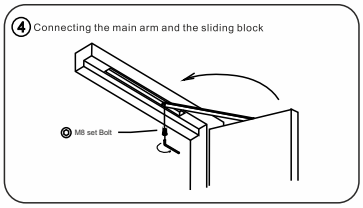

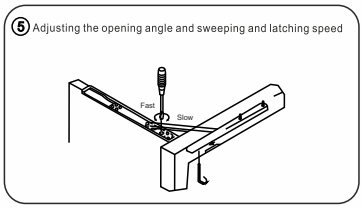

Concealed Round Door Closer Installation Diagram

● Diagram for left open door

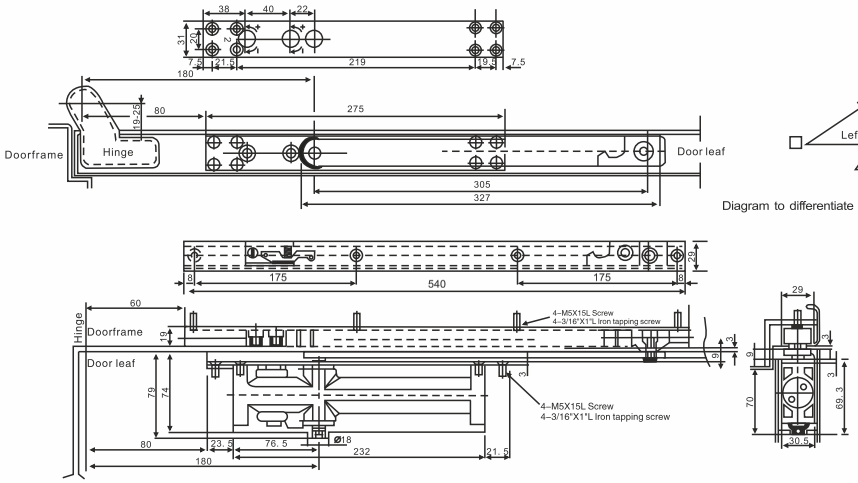

● Diagram for right open door

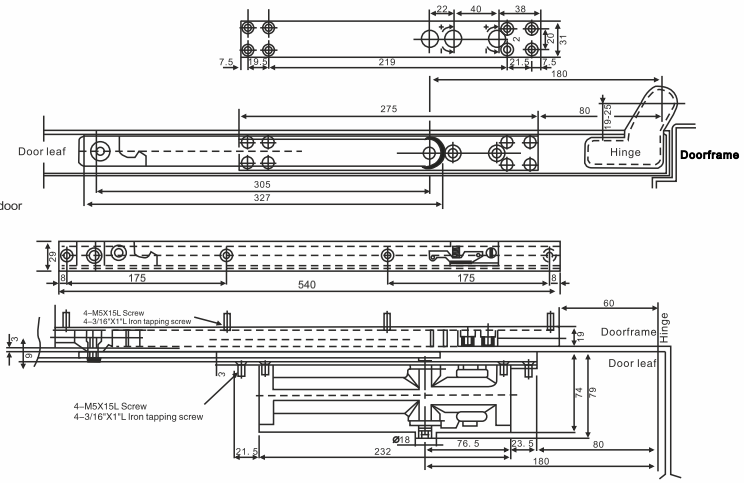

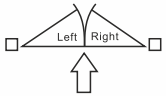

Diagram to differentiate the left and right open door

● Diagram for left open door (top jamb installation)

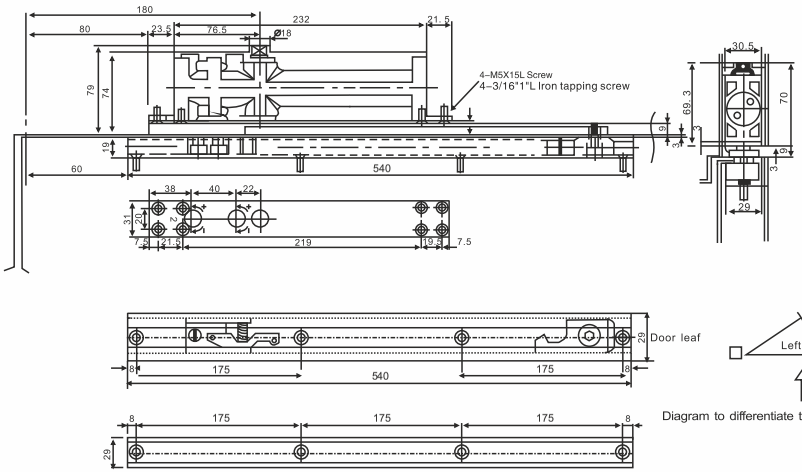

● Diagram for right open door (top jamb installation)

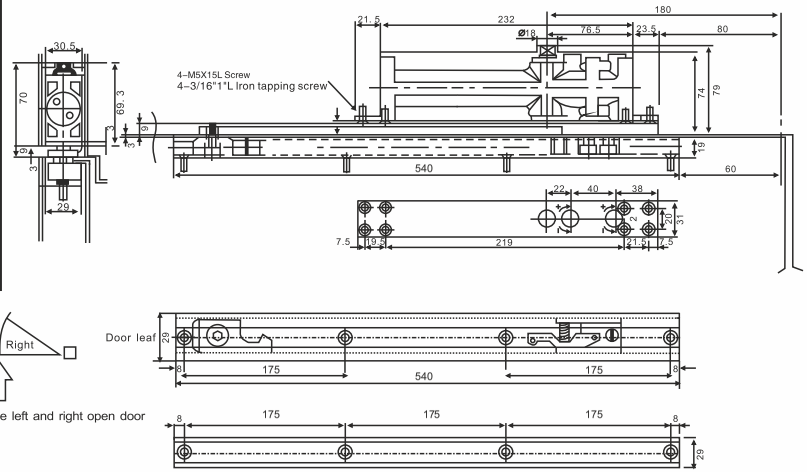

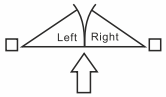

Diagram to differentiate the left and right open door

010F Series Door Closer

010F95110	90° Hold Open Door Closer

- Closing Force EN 2 - 5
- Speed Adjustment 180° - 15°
  With 90° Hold Open Arm
- Maximum Door Width 1200mm
- Maximum Door Weight 120 kg
- Maximum Angle of opening 90°
- Finish : Silver

Installation

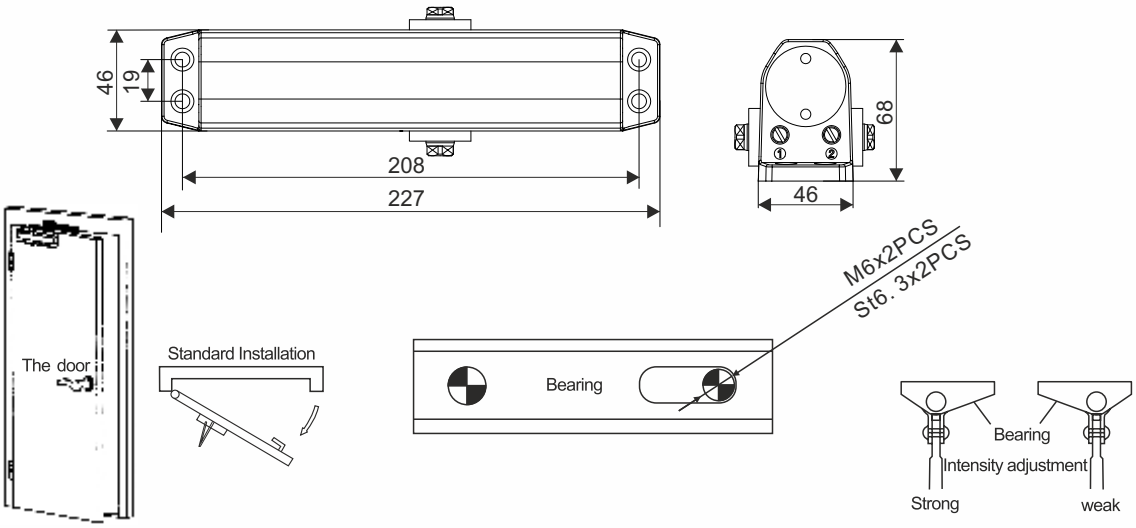

First, the door mounted vertically steps:

1. According to need to install the appropriate mounting template cut, pasted on the door and door frame.
2. According to the mounting template with the drill location bottom hole drilled screws (wood: ø3.5; Metal doors: ø4.2, ø5.1 and attack M5 thread)
3. Remove the primary arm and the adjustable arm. The main arm perpendicular to the body behind closed doors, mortise and tenon mounted on the shaft, and with a combination of screw fastening.
4. According to drilled mounting holes, the door closer body and adjustable arm bearings are mounted on the door or door frame, and tighten.
5. A main arm adjustable arm angle perpendicular to the door assembly together with flat washers and tighten the screws (scrwe length can be adjusted to complete the assembly) and then tighten the screw on the nut.
6. Install the decoration panel, the dust cover on the shaft of another cover.

Installation

Standard Installation:

The left-hand side vertical sliding door installation template;
(Right-hand side vertical sliding door sliding door left side of the mounting template and the template in the opposite direction)

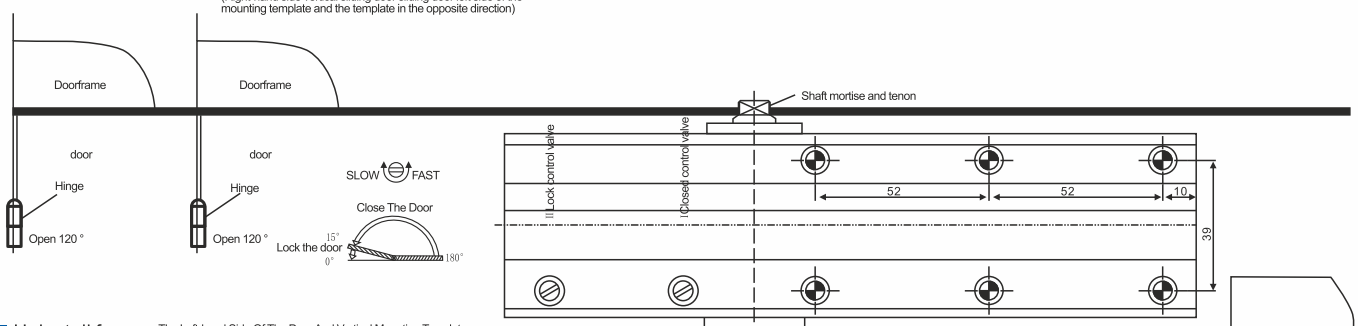

Uninstall form:

The Left-hand Side Of The Door And Vertical Mounting Template.
(Right-hand Side Of The Door With His Left Hand To Push The Vertical Mounting Template Template Side Door In The Opposite Direction)

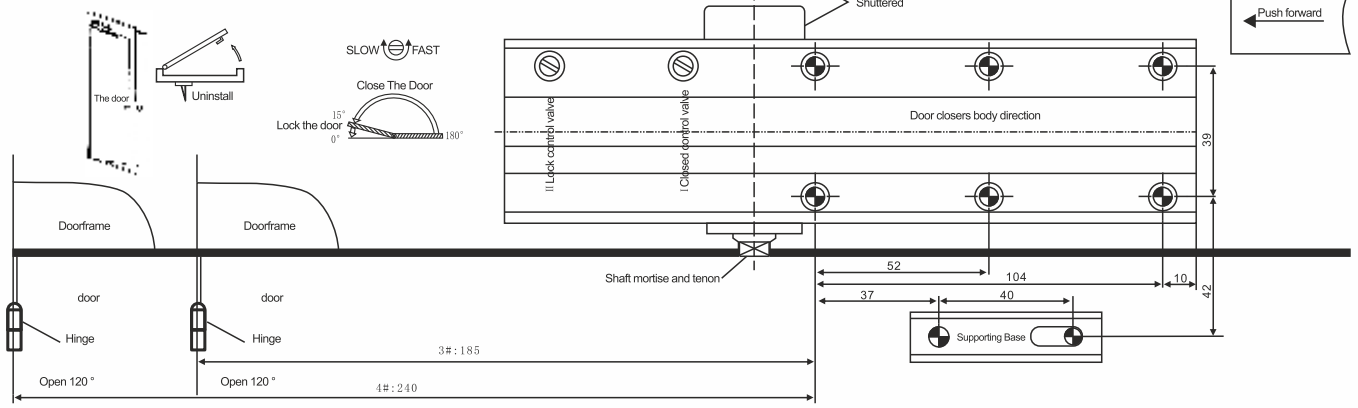

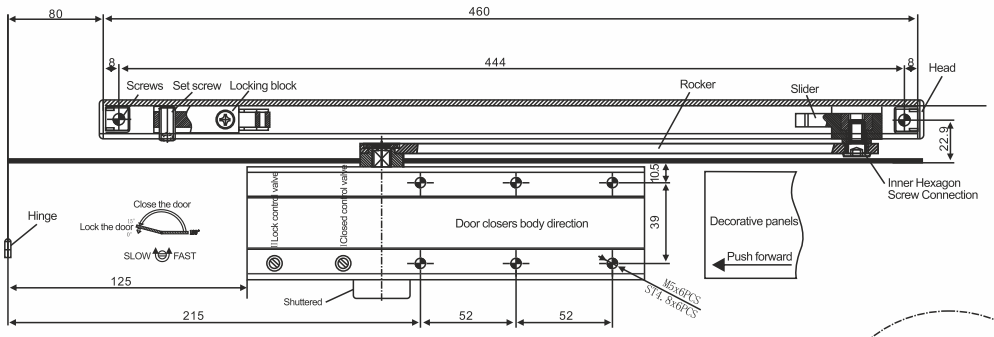

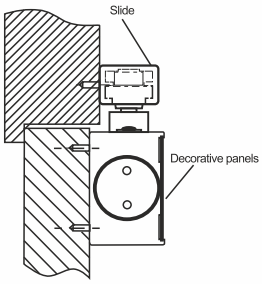

The rail installation steps:

1. According to the size of the installation diagram on the door closer body and slide with a self-tapping screw fastening (if metal door installed after the first drilling tapping screw fastening)
2. The rocker arm shaft is mounted on the square hole mortise and tenon, and use the rocker arm body intersects with closer 15 degree, and then use a combination of screw fastening.
3. The door opened at an angle, the arm is rotated in the closing direction, and then connected with a hex screw and slide the arm connected.
4. According to the choice of the angle of the door stop, the locking block is locked in the corresponding position on the rail.
5. Fitted with decorative panels: the dust cover on another shaft.

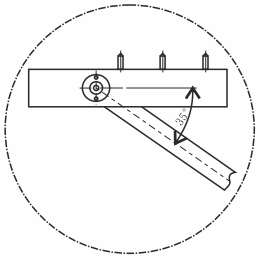

Door closers speed adjustment:

1. 1st speed control valve is closed. 2nd is to lock the door speed control valve.
2. The control valve counter-clockwise to increase faster, control valve clockwise to slow down.

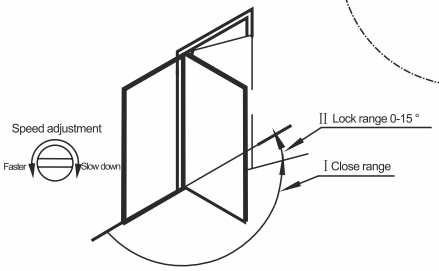

Stop door angle adjustments:

1. Set screws loose lock on the block, move the lock block to the desired position, the locking set screw can be screwed on the block.

Note:

1. The front door is not installed, non-flip shaft mortise and tenon.
2. The installation arm can not be beat over power shaft mortise and tenon.
3. Behind closed doors with automatic closing function, non-forcible door closing force.
4. Half a month after use, all departments should tighten the screw again.
5. Pay attention to the annual summer and winter speed regulation.
6. When the governor is prohibited to spin out of control valve body outer door closers.

010F Series Door Closer

010F95127	AUTOMATIC SWING DOOR OPERATORS (ULTRA QUITE)

PRODUCT DESCRIPTION

A. With the technology of encoder, brush less motor and worms and gears, ultra- quiet operations is achieved.
B. With multi-functional interface and versatile remote control technology, the functions of double-door interlock and position feedback, etc. are realized.
C. Push-and-open function and safety protection function (preventing the door from counter clock wise closing when it is blocked) are designed.
D. It can be matched with manual remote control.

TECHNICAL DETAIL

A. Providing optimal solutions for the automatic 90° side-hung doors, and enabling The door to be a kind of convenient service rather than a barrier to the modern Building system.
B. It can be installed on the standard doors that weigh up to 120kg and are 120mmIn width, and the door-opening angle can be adjusted. Compared with other famous products, it is more convenient to install and use, and can automatically regulate the operating device of side-hung doors. Apart from that, it tapped a brand-new Application field with its doorframe system not only applicable to large-scale public buildings but aldo offering and optimal solution to the buildings and hoses that don't have structural barriers. What is more, its ultra-quiet operation enables it particularly suitable to the noise-sensitive places (such as the door of operation rooms, hospital passageways, senior clinics, office buildings, secret organs, business hotels, senior apartment buildings and leader's offices etc).
C. It is very light (about 4.5kg) and delicate, and can be directly installed on the door or doorframe.
D. As a top-grade product with classic design made by the engineers of safety protection function (preventing the door from counter clock wise closing when it is blocked), etc and can be used in any situation, especially with its incomparable price performance ratio and matching with door controls, remote monitoring sensors, the product can absolutely ensure you worth it.

SPECIFICATION GRAPH

Applicable to	Vertical hinged door of all material
Door width	Less than 1200 mm
Door weight	Less than 120kg
Working procedure	Opening Signal → Unlocking control → Open Brake The Door → Hold open → Automatic Close → Buffer → Lock
Automatic opening angle	80°-130°
Opening hold	adjustable 0x~60 seconds
Opening rate	Adjustable 3~6 seconds
Closing rate	Adjustable 3~6 Seconds
Remote-control functions	Cipher code wireless remote-control opening remote-control opening hold, remote control closing and remote control against opening
Automatic protection against overloading	Unapplied
Intelligent protection against obstacle	Applied
Alarming against error	Applied
Intelligent overheating protection	Applied
Closing buffer	Applied
Electric lock control	Continuously adjustable
Locking torque adjustment	Applied
Opening buffer	Applied
Input power supply	AC220, AC14V/DC20V
Input power static/maximum	6W/45W
Dimensions of the main engine	450Length x 80Height x 80Thickenss

Installed on the door frame, opening inward

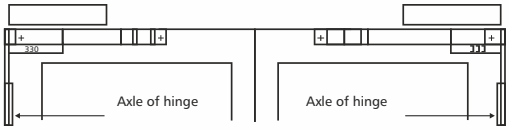

Installed on the door frame, opening outward

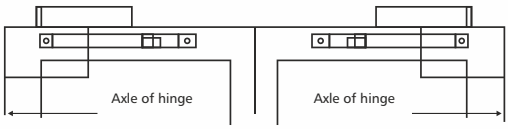

Installed on the side of the hinge, on the door, opening inward

Installed on the opposite side to the hinge,
on the door frame, opening outward

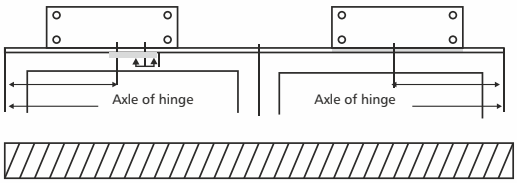

1. Applicable to all types of vertical hinged doors, left-opening door
2. Electrical wires can be put in through soft conduit from outside (surface mounting), or through holes of the floor (concealed moorright opened door. no limitation of door width also applicable to 2 leaf vertical hinged doors.unting.)
3. Installation can be after completion of construction or after decoration, it normally doesn't damage decoration.
4. Takes no more than 6 hours, or even 1.5 hours if it is carried out by skInstallation illed workers.

010F Series Ball Bearing Hinges

PRODUCT DESCRIPTION

- To be installed on the frame or on the panel.
- Material : SS 304
- Finish : SSS

Product Name	Item Code	Size (LxWxT) (mm)	Pcs/Ctn
Fluid Ball Bearing Hinge	010F96809	4” x 3” x 3	10
Fluid Ball Bearing Hinge	010F96810	5” x 3” x 3	10